QUANTUM PUMPS SA

SERIES I - 10"x 10"

DATA SHEET

NET WEIGHT 635kg (1400lbs)
SHIPPING WEIGHTS 663kg (1461 lbs)
IMPELLER DIA. 374,65mm (14.3/4")
R.P.M. FROM 650rpm TO 1450rpm
MAX. SOLIDS 76,2mm (3")

SELF-PRIMING

650 RPM 2,1m (7ft) - 750 RPM 3,4m (11ft)
850 RPM 4,3m (14ft) - 950 RPM 5,2m (17ft)
1050 RPM 5,5m (18ft) -1150 RPM 5,5m (18ft)
1250 RPM 5,8m (19ft) -1350 RPM 6,7m (22ft)
1450 RPM 6,7m (22ft)

BEFORE USING THIS TABLE, CHECK THE NPSH.

PERFORMANCE CURVE 10"x10"

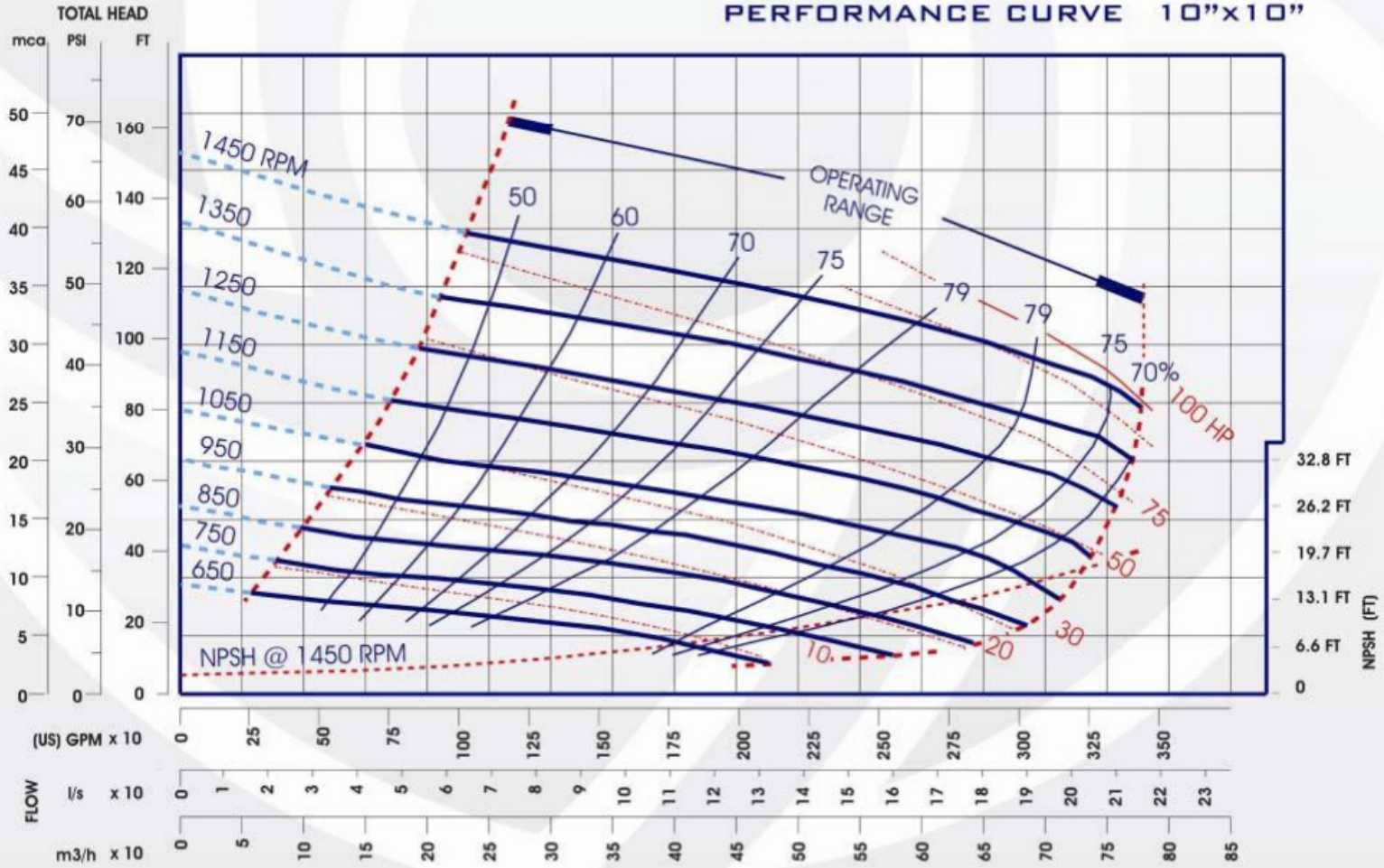

EXTERNAL DIMENSIONS
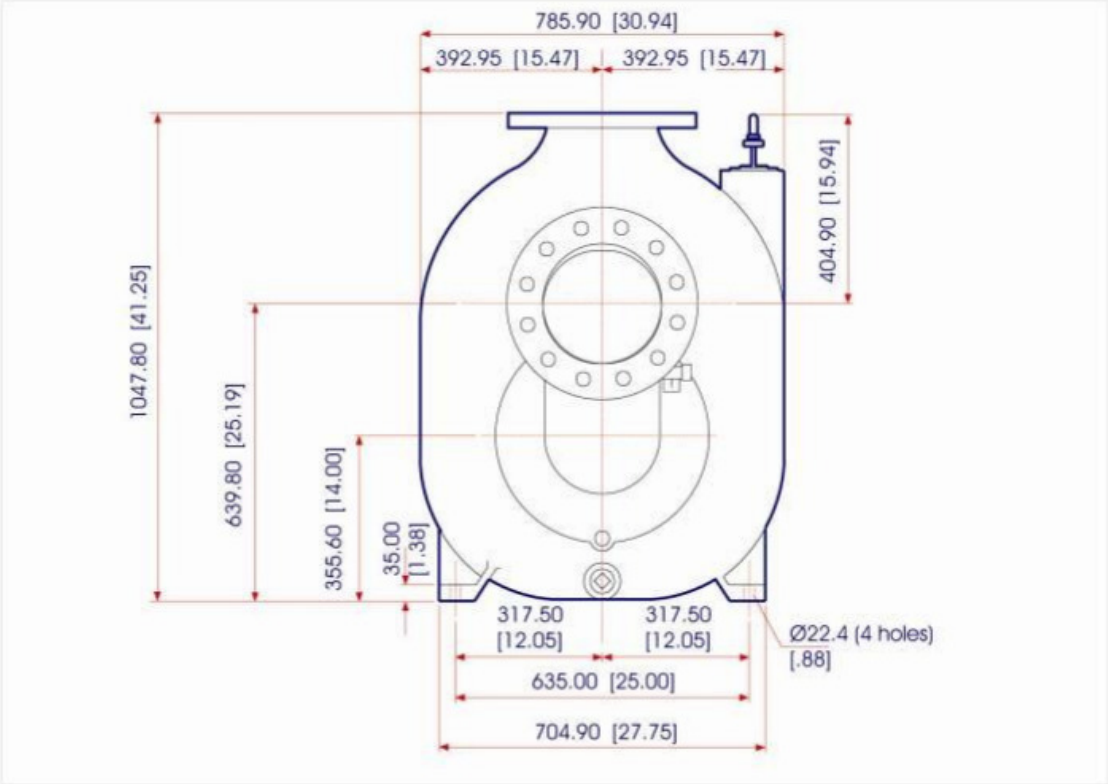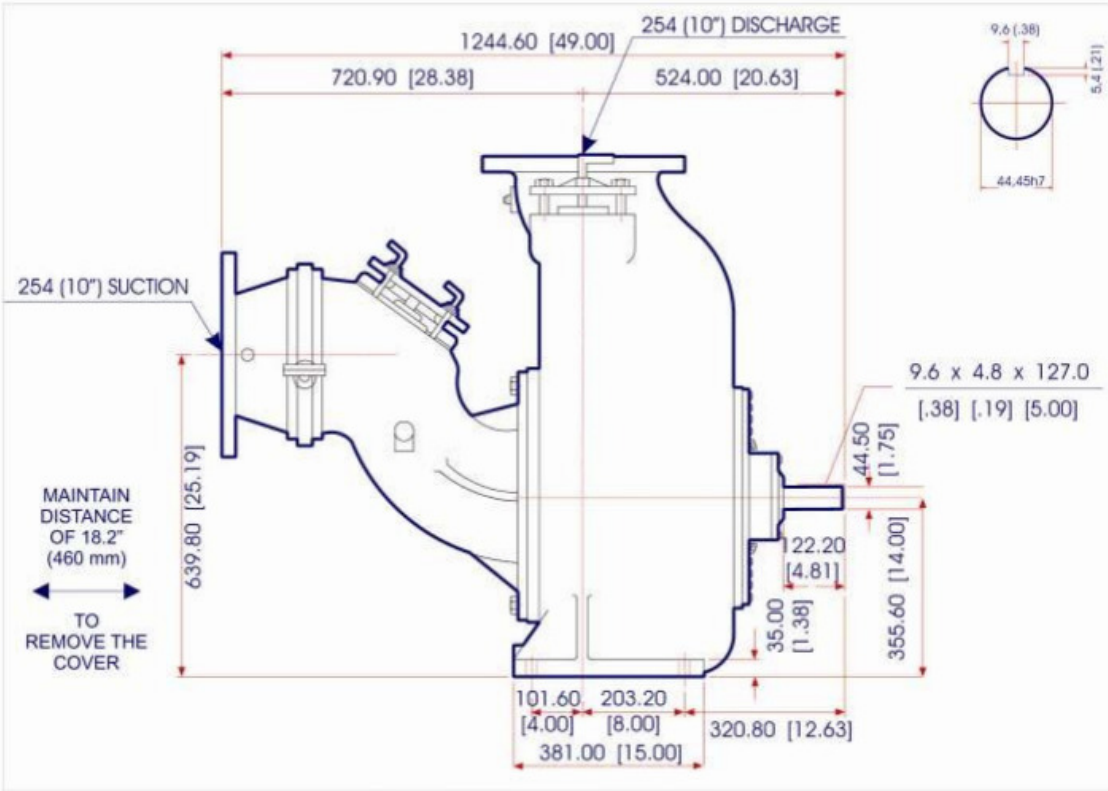
MILLIMETERS (INCHES)