QUANTUM PUMPS SA

Pump Model QSC 400-300-560

Speed 1450rpm

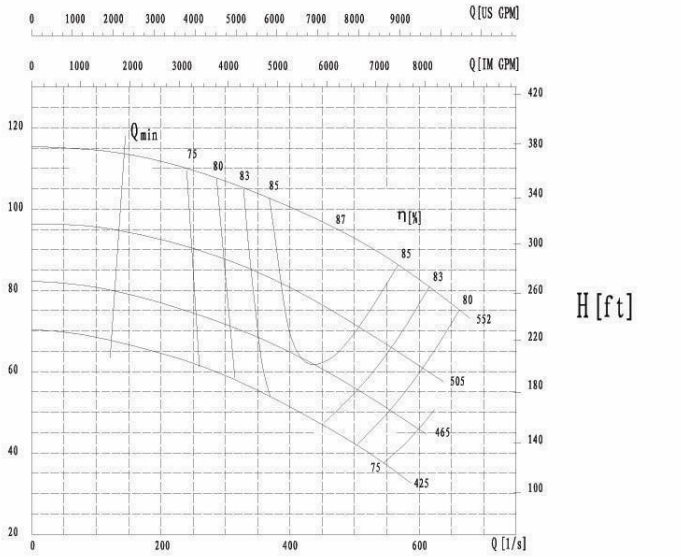

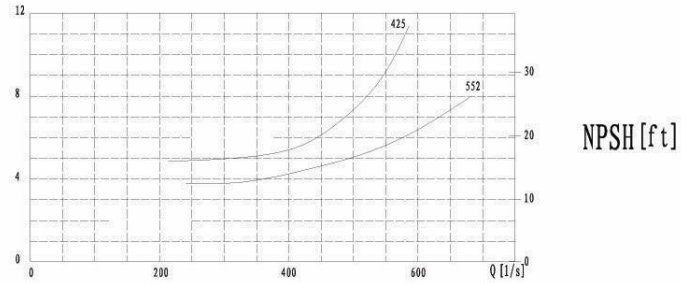

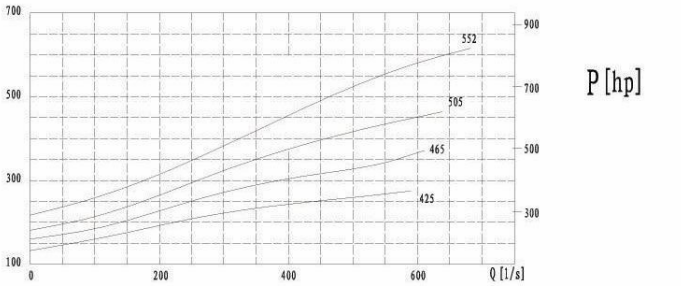

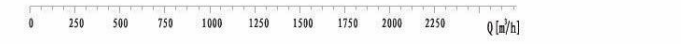

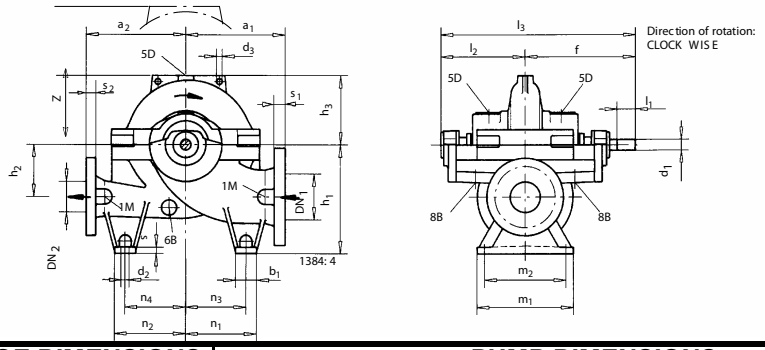

Pump Size	FLANGE DIMENSIONS				PUMP DIMENSIONS									
	DN1	DN2	s1	s2	a1	a2	d3	f	h1	h2	h3	l2	l3	z
QSC 400-300-560	400	300	57.2	50.8	700	650	24.5	810	710	350	430	585	1395	860
	FOOT DIMENSIONS									SHAFT		PUMP WEIGHT (kg)		
	b1	d2	m1	m2	n1	n2	n3	n4	s	d1	L1			
	100	22	600	520	525	525	475	475	26	85	180	1425		